DECLUTCHABLE GEARS
GD

CE Ex II 2 G/D

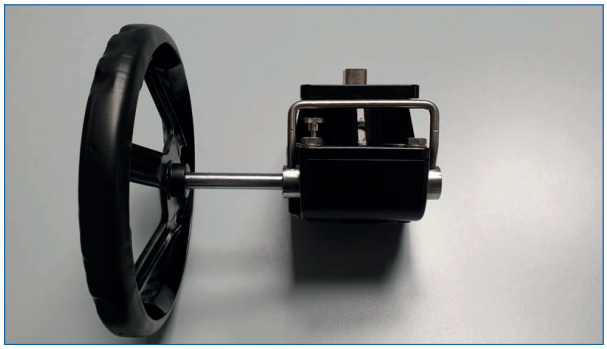

Declutchable gears, are used between butterfly valves and pneumatic actuators and in case of malfunction of actuator they can open or close the valve.

AT.EX. Certified for zone 1 and 21

Available versions

- from GD-1 to GD-6

GEAR GD

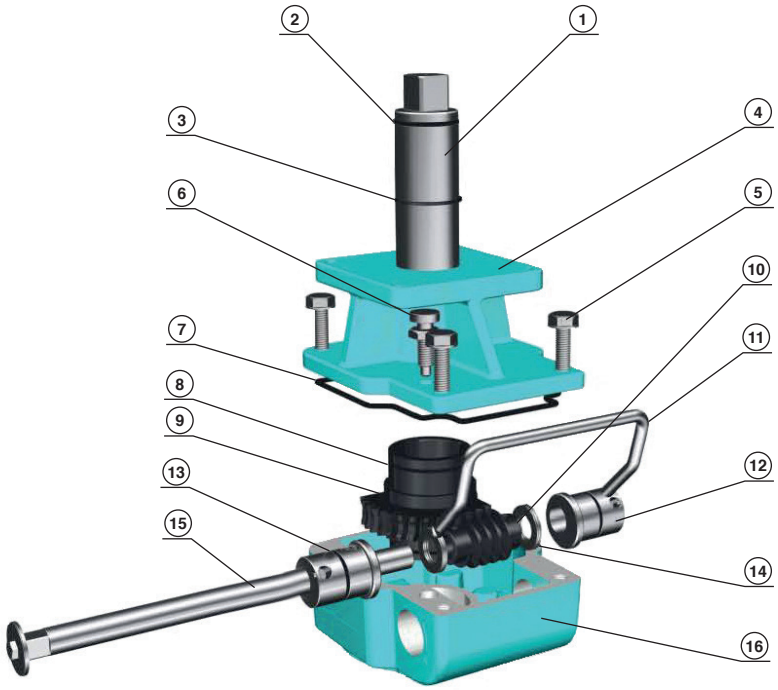

ITEM	PARTS	MATERIAL	ITEM	PARTS	MATERIAL
1	DRIVE SPINDLE	ALLOY STEEL	9	WORM GEAR	SPHEROIDAL GRAPHITE CAST IRON
2	SEAL RING	NITRILE RUBBER	10	PLANE BEARING	ALLOY STEEL
3	REED SPRING	STAINLESS STEEL	11	HANDLE	STAINLESS STEEL
4	UPPER COVER	ALUMINIUM ALLOY	12	ECCENTRIC SLEEVE	ALLOY STEEL
5	A FASTENING	STAINLESS STEEL	13	SEAL RING	NITRILE RUBBER
6	POSITIONING PIN	ALLOY STEEL	14	WORM	ALLOY STEEL
7	SEAL RING	NITRILE RUBBER	15	TRANSMISSION ROD	ALLOY STEEL
8	SEAL RING	NITRILE RUBBER	16	BOX	ALUMINIUM ALLOY

The technical documentation is updating at edition date; the technical details are indicative only and unbound.
Any modifications could be made without notice.
© Valsar 2018

DECLUTCHABLE GEARS
GD

CE Ex II 2 G/D

- Declutchable gears are used for quarter turn valves. They are assemblied between valve and actuator and when actuator doesn't work they can open or close the valve to solve a case of emergency.

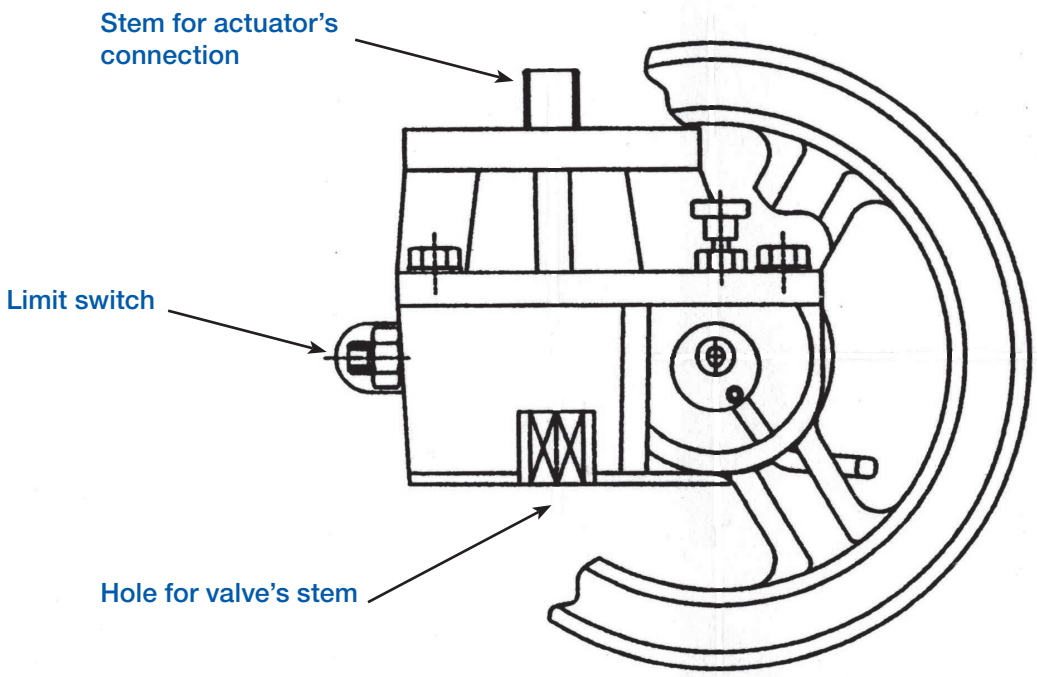

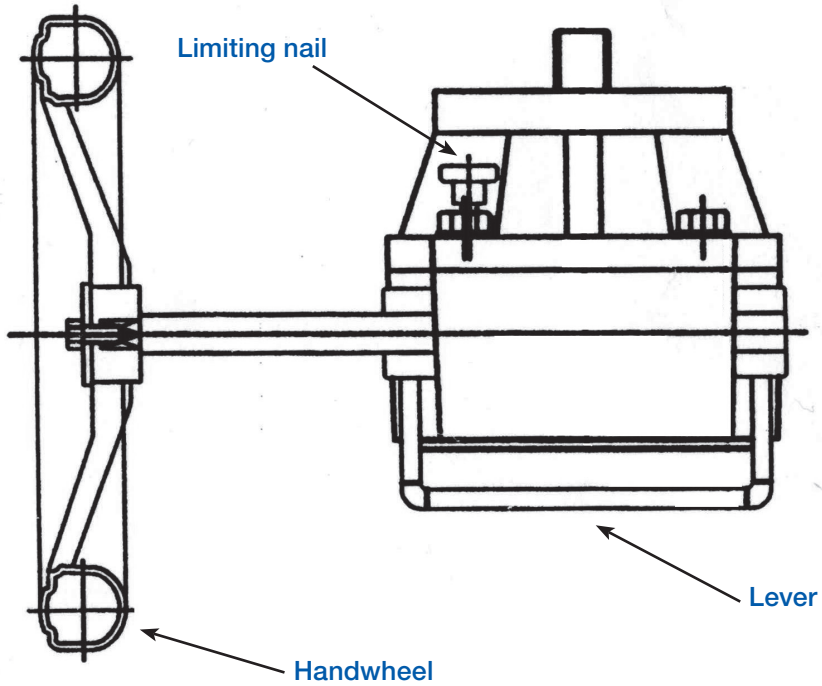

© Valsar 2018 The technical documentation is updating at edition date; the technical details are indicative only and unbound. Any modifications could be made without notice.

DECLUTCHABLE GEARS
GD

CE Ex II 2 G/D

TECHNICAL DETAILS

- Epoxy coated aluminium body.
- Extreme pressure lithium grease lubricated worm gear.
- ISO 5211 connections.
- IP 68 protection.

CONNECTIONS VALVE-GEAR-ACTUATOR

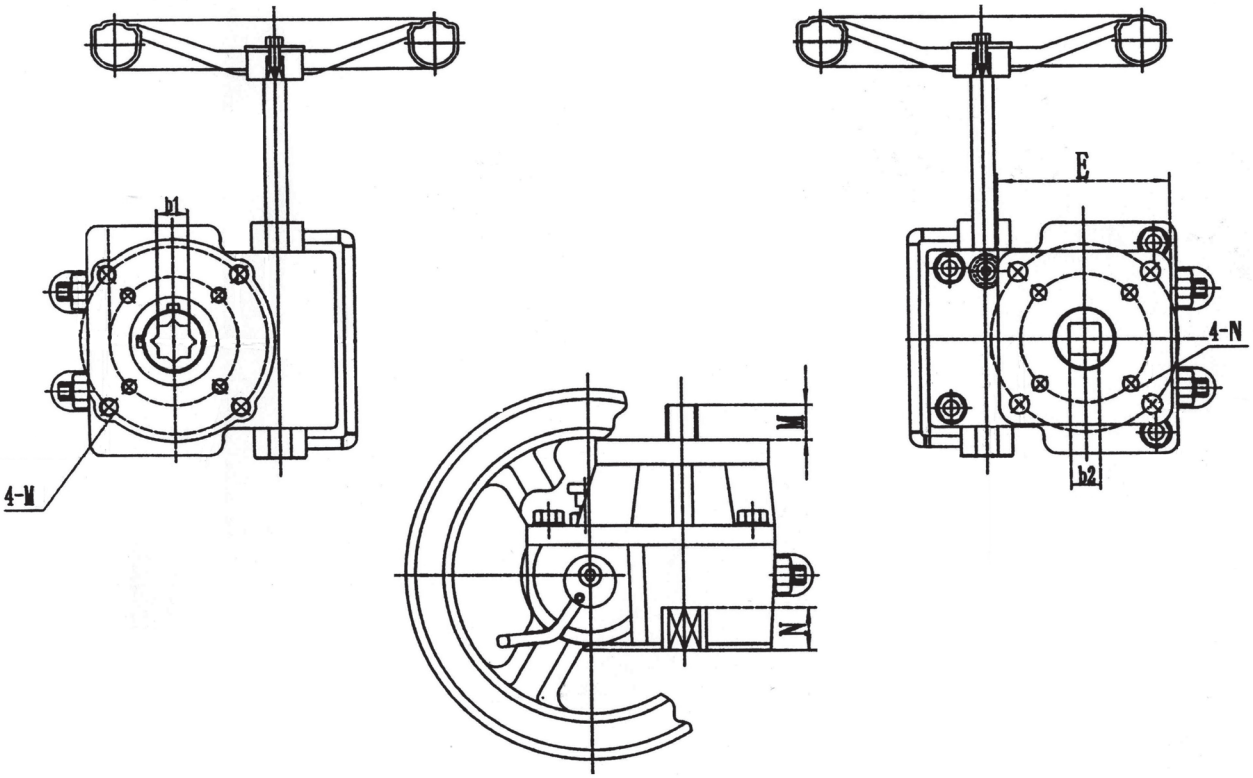

TYPE	SHAFT CONNECTION (mm)				VALVE CONNECTION						ACTUATOR CONNECTION						
	b1	N	b2	M	ISO 5211	4-M1	ISO 5211	4-M2	ISO 5211	4-M3	E	ISO 5211	4-N1	ISO 5211	4-N2	ISO 5211	4-N3
GD-1	14	20	14	14	F05	4-Ø6	F07	4-Ø8	-	-	70*70	F05	4-Ø6	F07	4-Ø8	-	-
GD-2	17	22	17	16	F07	4-Ø8	F10	4-Ø10	-	-	93.5*93.5	F07	4-Ø8	F10	4-Ø10	-	-
GD-3	22	26	22	20	F07	4-Ø8	F10	4-Ø10	F12	4-Ø12	113.5*113.5	F10	4-Ø10	F12	4-Ø12	-	-
GD-4	27	32	27	26.5	F10	4-Ø10	F14	4-Ø16	-	-	129*129	F10	4-Ø10	F12	4-Ø12	F14	4-Ø16
GD-5	36	38	36	39	F14	4-Ø16	-	-	-	-	164*164	F14	4-Ø16	F16	4-Ø21	-	-
GD-6	46	50	46	49	F16	4-Ø20	-	-	-	-	162*162	F16	4-Ø22	-	-		

The technical documentation is updating at edition date; the technical details are indicative only and unbound.
Any modifications could be made without notice.
© Valsar 2018

DECLUTCHABLE GEARS
GD

CE Ex II 2 G/D

DIMENSIONS

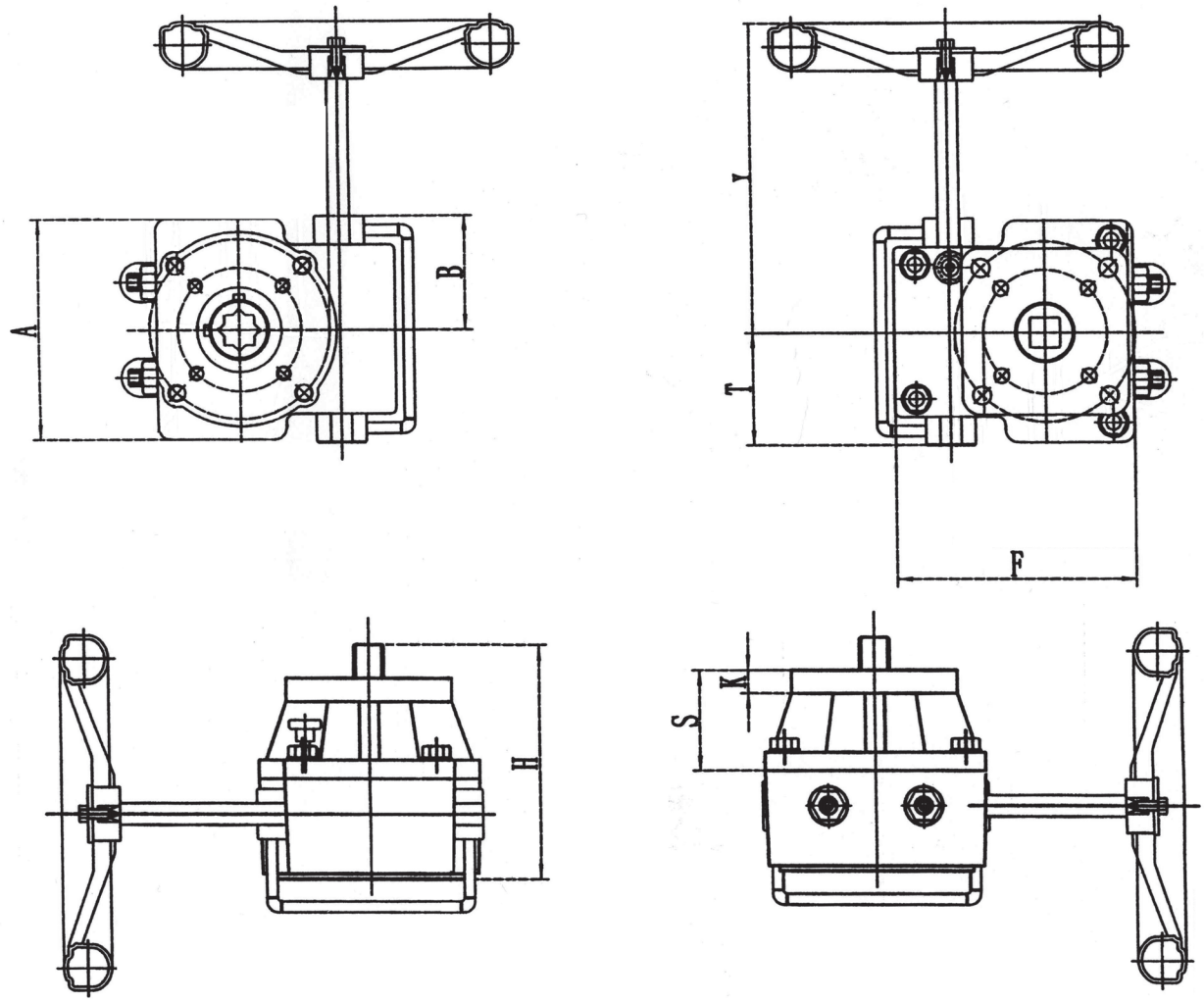

Type	A (mm)	B (mm)	F (mm)	T (mm)	Y (mm)	H (mm)	S (mm)	K (mm)	Gear Ratio	Torque (Nm)	Handwheel (mm)	Weight (kg)
GD-1	89.5	55	115	44	153	120	53	10	26:1	150	180	3
GD-2	125	64	135	62.5	184	129	56.5	12.5	28:1	300	200	4.5
GD-3	136	69	160	70	196	151	68.7	13	38:1	700	280	7
GD-4	187.5	93	200	94	255	193.5	84	15	54:1	1100	320	13.7
GD-5	220	109	244	115	310	221	89.5	15	80:1	2000	400	21
GD-6	250	120	282	137.5	362	250	94	15	78:1	3500	500	33

The technical documentation is updating at edition date; the technical details are indicative only and unbound.
Any modifications could be made without notice.
© Valsar 2018

Via Raffaello Sanzio, 14 - 20090 Cesano Boscone (MI)
Telefono 0039 02 45866478 r.a. - Fax 0039 02 4584575
staff@valsar.it - valsar@valvoleafarfalla.it - www.valsar.it